SMBJ5.0---SMBJ440CA Thyristor Surge Suppresser

- 600 Watt Peak Power
- Dimension

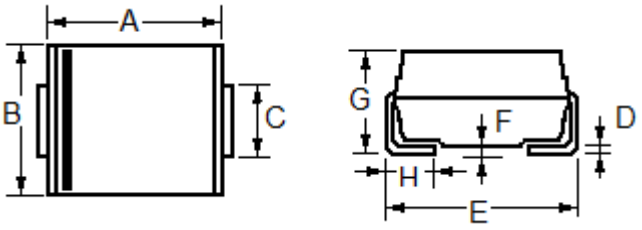

SMB (Package)

Dim	Millimeters		Inches	
	Min	Max	Min	Max
A	4.06	4.57	0.160	0.180
B	3.30	3.94	0.130	0.155
C	1.95	2.20	0.077	0.086
D	0.125	0.305	0.006	0.012
E	5.21	5.59	0.205	0.220
F	----	0.203	----	0.008
G	2.13	2.44	0.084	0.096
H	0.76	1.52	0.030	0.060

- Specification

Type Number		Marking		Reverse Stand-Off Voltage	Breakdown Voltage Min. @I_T	Breakdown Voltage Max. @ I_T	Test Current	Maximum Clamping Voltage @I_{PP}	Peak Pulse Current	Reverse Leakage @V_{RMW}
(Uni)	(Bi)	(Uni)	(Bi)	V_{RMW}(V)	$V_{BR\ MIN}$(V)	$V_{BR\ MAX}$(V)	I_T (mA)	V_C(V)	I_{PP}(A)	I_R(uA)
SMBJ5.0	SMBJ5.0C	KD	AD	5.0	6.40	7.55	10	9.6	62.5	800.0
SMBJ5.0A	SMBJ5.0CA	KE	AE	5.0	6.40	7.25	10	9.2	65.2	800.0
SMBJ6.0	SMBJ6.0C	KF	AF	6.0	6.67	8.45	10	11.4	52.6	800.0
SMBJ6.0A	SMBJ6.0CA	KG	AG	6.0	6.67	7.67	10	10.3	58.3	800.0
SMBJ6.5	SMBJ6.5C	KH	AH	6.5	7.22	9.14	10	12.3	48.8	500.0
SMBJ6.5A	SMBJ6.5CA	KK	AK	6.5	7.22	8.30	10	11.2	53.6	500.0
SMBJ7.0	SMBJ7.0C	KL	AL	7.0	7.78	9.86	10	13.3	45.1	200.0
SMBJ7.0A	SMBJ7.0CA	KM	AM	7.0	7.78	8.95	10	12.0	50.0	200.0
SMBJ7.5	SMBJ7.5C	KN	AN	7.5	8.33	10.67	1.0	14.3	42.0	100.0
SMBJ7.5A	SMBJ7.5CA	KP	AP	7.5	8.33	9.58	1.0	12.9	46.5	100.0
SMBJ8.0	SMBJ8.0C	KQ	AQ	8.0	8.89	11.3	1.0	15.0	40.0	50.0
SMBJ8.0A	SMBJ8.0CA	KR	AR	8.0	8.89	10.23	1.0	13.6	44.1	50.0
SMBJ8.5	SMBJ8.5C	KS	AS	8.5	9.44	11.92	1.0	15.9	37.7	20.0
SMBJ8.5A	SMBJ8.5CA	KT	AT	8.5	9.44	10.82	1.0	14.4	41.7	20.0
SMBJ9.0	SMBJ9.0C	KU	AU	9.0	10.0	12.6	1.0	16.9	35.5	10.0
SMBJ9.0A	SMBJ9.0CA	KV	AV	9.0	10.0	11.5	1.0	15.4	39.0	10.0
SMBJ10	SMBJ10C	KW	AW	10	11.1	14.1	1.0	18.8	31.9	5.0
SMBJ10A	SMBJ10CA	KX	AX	10	11.1	12.8	1.0	17.0	35.3	5.0
SMBJ11	SMBJ11C	KY	AY	11	12.2	15.4	1.0	20.1	29.9	5.0
SMBJ11A	SMBJ11CA	KZ	AZ	11	12.2	14.0	1.0	18.2	33.0	5.0
SMBJ12	SMBJ12C	LD	BD	12	13.3	16.9	1.0	22.0	27.3	5.0
SMBJ12A	SMBJ12CA	LE	BE	12	13.3	15.3	1.0	19.9	30.2	5.0
SMBJ13	SMBJ13C	LF	BF	13	14.4	18.2	1.0	23.8	25.2	5.0
SMBJ13A	SMBJ13CA	LG	BG	13	14.4	16.5	1.0	21.5	27.9	5.0

SMBJ5.0---SMBJ440CA Thyristor Surge Suppresser

Type Number		Marking		Reverse Stand-Off Voltage	Breakdown Voltage Min. @I_T	Breakdown Voltage Max. @ I_T	Test Current	Maximum Clamping Voltage @I_{PP}	Peak Pulse Current	Reverse Leakage @V_{RMW}
(Uni)	(Bi)	(Uni)	(Bi)	V_{RMW}(V)	$V_{BR\ MIN}$(V)	$V_{BR\ MAX}$(V)	I_T (mA)	V_C(V)	I_{PP}(A)	I_R(uA)
SMBJ14	SMBJ14C	LH	BH	14	15.6	19.8	1.0	25.8	23.3	5.0
SMBJ14A	SMBJ14CA	LK	BK	14	15.6	17.9	1.0	23.2	25.9	5.0
SMBJ15	SMBJ15C	LL	BL	15	16.7	21.1	1.0	26.9	22.3	5.0
SMBJ15A	SMBJ15CA	LM	BM	15	16.7	19.2	1.0	24.4	24.6	5.0
SMBJ16	SMBJ16C	LN	BN	16	17.8	22.6	1.0	28.8	20.8	5.0
SMBJ16A	SMBJ16CA	LP	BP	16	17.8	20.5	1.0	26.0	23.1	5.0
SMBJ17	SMBJ17C	LQ	BQ	17	18.9	23.9	1.0	30.5	19.7	5.0
SMBJ17A	SMBJ17CA	LR	BR	17	18.9	21.7	1.0	27.6	21.7	5.0
SMBJ18	SMBJ18C	LS	BS	18	20.0	25.3	1.0	32.2	18.6	5.0
SMBJ18A	SMBJ18CA	LT	BT	18	20.0	23.3	1.0	29.2	20.5	5.0
SMBJ20	SMBJ20C	LU	BU	20	22.2	28.1	1.0	35.8	16.8	5.0
SMBJ20A	SMBJ20CA	LV	BV	20	22.2	25.5	1.0	32.4	18.5	5.0
SMBJ22	SMBJ22C	LW	BW	22	24.4	30.9	1.0	39.4	15.2	5.0
SMBJ22A	SMBJ22CA	LX	BX	22	24.4	28.0	1.0	35.5	16.9	5.0
SMBJ24	SMBJ24C	LY	BY	24	26.7	33.8	1.0	43.0	14.0	5.0
SMBJ24A	SMBJ24CA	LZ	BZ	24	26.7	30.7	1.0	38.9	15.4	5.0
SMBJ26	SMBJ26C	MD	CD	26	28.9	36.6	1.0	46.6	12.9	5.0
SMBJ26A	SMBJ26CA	ME	CE	26	28.9	33.2	1.0	42.1	14.3	5.0
SMBJ28	SMBJ28C	MF	CF	28	31.1	39.4	1.0	50.0	12.0	5.0
SMBJ28A	SMBJ28CA	MG	CG	28	31.1	35.8	1.0	45.4	13.2	5.0
SMBJ30	SMBJ30C	MH	CH	30	33.3	42.2	1.0	53.5	11.2	5.0
SMBJ30A	SMBJ30CA	MK	CK	30	33.3	38.3	1.0	48.4	12.4	5.0
SMBJ33	SMBJ33C	ML	CL	33	36.7	46.5	1.0	59.0	10.2	5.0
SMBJ33A	SMBJ33CA	MM	CM	33	36.7	42.2	1.0	53.3	11.3	5.0
SMBJ36	SMBJ36C	MN	CN	36	40.0	50.7	1.0	64.3	9.3	5.0
SMBJ36A	SMBJ36CA	MP	CP	36	40.0	46.0	1.0	58.1	10.3	5.0
SMBJ40	SMBJ40C	MQ	CQ	40	44.4	56.3	1.0	71.4	8.4	5.0
SMBJ40A	SMBJ40CA	MR	CR	40	44.4	51.1	1.0	64.5	9.3	5.0
SMBJ43	SMBJ43C	MS	CS	43	47.8	60.5	1.0	76.7	7.8	5.0
SMBJ43A	SMBJ43CA	MT	CT	43	47.8	54.9	1.0	69.4	8.6	5.0
SMBJ45	SMBJ45C	MU	CU	45	50.0	63.3	1.0	80.3	7.5	5.0
SMBJ45A	SMBJ45CA	MV	CV	45	50.0	57.5	1.0	72.7	8.3	5.0
SMBJ48	SMBJ48C	MW	CW	48	53.3	67.5	1.0	85.5	7.0	5.0
SMBJ48A	SMBJ48CA	MX	CX	48	53.3	61.3	1.0	77.4	7.8	5.0
SMBJ51	SMBJ51C	MY	CY	51	56.7	71.8	1.0	91.1	6.6	5.0
SMBJ51A	SMBJ51CA	MZ	CZ	51	56.7	65.2	1.0	82.4	7.3	5.0

SMBJ5.0---SMBJ440CA Thyristor Surge Suppresser

Type Number		Marking		Reverse Stand-Off Voltage	Breakdown Voltage Min. @I_T	Breakdown Voltage Max. @ I_T	Test Current	Maximum Clamping Voltage @I_{PP}	Peak Pulse Current	Reverse Leakage @V_{RMW}
(Uni)	(Bi)	(Uni)	(Bi)	V_{RMW}(V)	$V_{BR\ MIN}$(V)	$V_{BR\ MAX}$(V)	I_T (mA)	V_C(V)	I_{PP}(A)	I_R(uA)
SMBJ54	SMBJ54C	ND	DD	54	60.0	76.0	1.0	96.3	6.2	5.0
SMBJ54A	SMBJ54CA	NE	DE	54	60.0	69.0	1.0	87.1	6.9	5.0
SMBJ58	SMBJ58C	NF	DF	58	64.4	81.6	1.0	103	5.8	5.0
SMBJ58A	SMBJ58CA	NG	DG	58	64.4	74.1	1.0	93.6	6.4	5.0
SMBJ60	SMBJ60C	NH	DH	60	66.7	84.5	1.0	107	5.6	5.0
SMBJ60A	SMBJ60CA	NK	DK	60	66.7	76.7	1.0	96.8	6.2	5.0
SMBJ64	SMBJ64C	NL	DL	64	71.1	90.1	1.0	114	5.3	5.0
SMBJ64A	SMBJ64CA	NM	DM	64	71.1	81.8	1.0	103	5.8	5.0
SMBJ70	SMBJ70C	NN	DN	70	77.8	98.6	1.0	125	4.8	5.0
SMBJ70A	SMBJ70CA	NP	DP	70	77.8	89.5	1.0	113	5.3	5.0
SMBJ75	SMBJ75C	NQ	DQ	75	83.0	105.7	1.0	134	4.5	5.0
SMBJ75A	SMBJ75CA	NR	DR	75	83.0	95.8	1.0	121	5.0	5.0
SMBJ78	SMBJ78C	NS	DS	78	86.0	109.8	1.0	139	4.3	5.0
SMBJ78A	SMBJ78CA	NT	DT	78	86.0	99.7	1.0	126	4.8	5.0
SMBJ85	SMBJ85C	NU	DU	85	94.0	119.2	1.0	151	4.0	5.0
SMBJ85A	SMBJ85CA	NV	DV	85	94.0	108.2	1.0	137	4.4	5.0
SMBJ90	SMBJ90C	NW	DW	90	100	126.5	1.0	160	3.8	5.0
SMBJ90A	SMBJ90CA	NX	DX	90	100	115.5	1.0	146	4.1	5.0
SMBJ100	SMBJ100C	NY	DY	100	111	141.0	1.0	179	3.4	5.0
SMBJ100A	SMBJ100CA	NZ	DZ	100	111	128.0	1.0	162	3.7	5.0
SMBJ110	SMBJ110C	PD	ED	110	122	154.5	1.0	196	3.1	5.0
SMBJ110A	SMBJ110CA	PE	EE	110	122	140.5	1.0	177	3.4	5.0
SMBJ120	SMBJ120C	PF	EF	120	133	169.0	1.0	214	2.8	5.0
SMBJ120A	SMBJ120CA	PG	EG	120	133	153.0	1.0	193	3.1	5.0
SMBJ130	SMBJ130C	PH	EH	130	144	182.5	1.0	231	2.6	5.0
SMBJ130A	SMBJ130CA	PK	EK	130	144	165.5	1.0	209	2.9	5.0
SMBJ150	SMBJ150C	PL	EL	150	167	211.5	1.0	268	2.2	5.0
SMBJ150A	SMBJ150CA	PM	EM	150	167	192.5	1.0	243	2.5	5.0
SMBJ160	SMBJ160C	PN	EN	160	178	226.0	1.0	287	2.1	5.0
SMBJ160A	SMBJ160CA	PP	EP	160	178	205.0	1.0	259	2.3	5.0
SMBJ170	SMBJ170C	PQ	EQ	170	189	239.5	1.0	304	2.0	5.0
SMBJ170A	SMBJ170CA	PR	ER	170	189	217.5	1.0	275	2.2	5.0
SMBJ180	SMBJ180C	PS	ES	180	200	253.8	1.0	321	1.9	5.0
SMBJ180A	SMBJ180CA	PT	ET	180	200	230.4	1.0	290	2.1	5.0
SMBJ190	SMBJ190C	PU	EU	190	211	267.9	1.0	339	1.8	5.0
SMBJ190A	SMBJ190CA	PV	EV	190	211	243.2	1.0	306	2.0	5.0

SMBJ5.0---SMBJ440CA Thyristor Surge Suppresser

Type Number		Marking		Reverse Stand-Off Voltage	Breakdown Voltage Min. @I_T	Breakdown Voltage Max. @ I_T	Test Current	Maximum Clamping Voltage @I_{PP}	Peak Pulse Current	Reverse Leakage @V_{RMW}
(Uni)	(Bi)	(Uni)	(Bi)	V_{RMW}(V)	$V_{BR\ MIN}$(V)	$V_{BR\ MAX}$(V)	I_T (mA)	V_C(V)	I_{PP}(A)	I_R(uA)
SMBJ200	SMBJ200C	PW	EW	200	222	282.0	1.0	356	1.7	5.0
SMBJ200A	SMBJ200CA	PX	EX	200	222	256.0	1.0	322	1.9	5.0
SMBJ210	SMBJ210C	PY	EY	210	233	296.1	1.0	375	1.6	5.0
SMBJ210A	SMBJ210CA	PZ	EZ	210	233	268.8	1.0	339	1.8	5.0
SMBJ220	SMBJ220C	QD	FD	220	244	310.2	1.0	392	1.5	5.0
SMBJ220A	SMBJ220CA	QE	FE	220	244	281.6	1.0	355	1.7	5.0
SMBJ250	SMBJ250C	QF	FF	250	278	342.5	1.0	447	1.3	5.0
SMBJ250A	SMBJ250CA	QG	FG	250	278	309.0	1.0	403	1.5	5.0
SMBJ300	SMBJ300C	QH	FH	300	333	411.0	1.0	535	1.1	5.0
SMBJ300A	SMBJ300CA	QK	FK	300	333	371.0	1.0	484	1.2	5.0
SMBJ350	SMBJ350C	QL	FL	350	389	479.5	1.0	624	1.0	5.0
SMBJ350A	SMBJ350CA	QM	FM	350	389	432.0	1.0	565	1.1	5.0
SMBJ400	SMBJ400C	QN	FN	400	444	548.0	1.0	687	0.9	5.0
SMBJ400A	SMBJ400CA	QP	FP	400	444	494.0	1.0	645	0.9	5.0
SMBJ440	SMBJ440C	QQ	FQ	440	489	602.8	1.0	786	0.8	5.0
SMBJ440A	SMBJ440CA	QR	FR	440	489	543.0	1.0	710	0.8	5.0

TECH CHIP POWER PROTECT

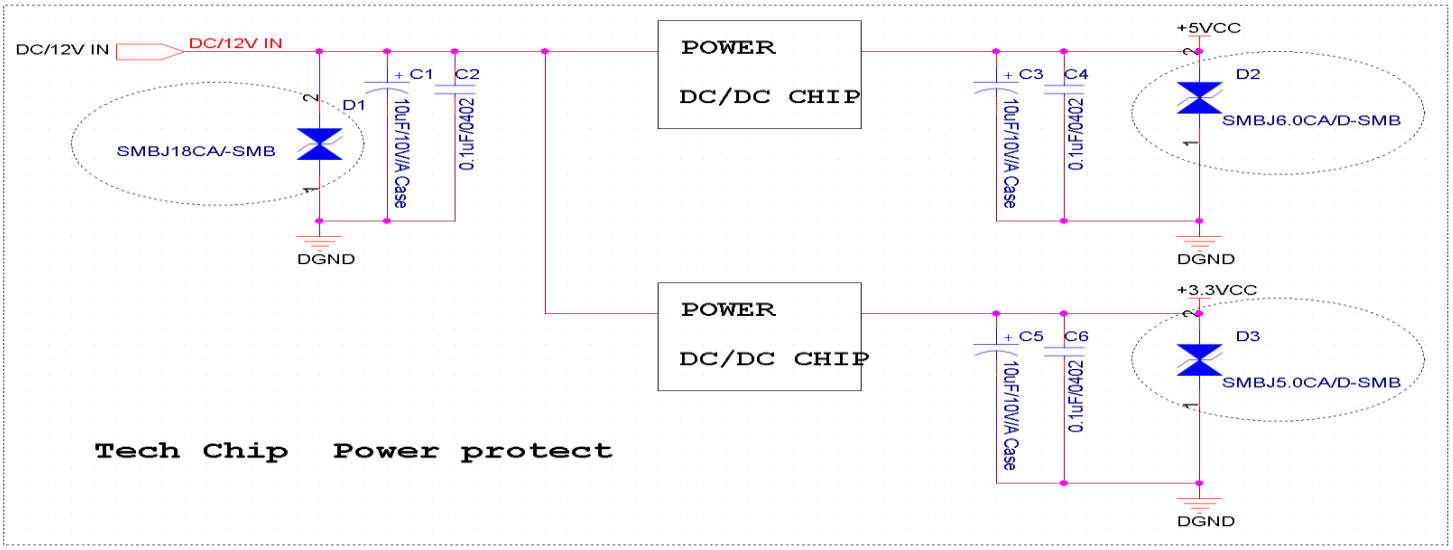

PACKAGE REEL INFORMATION

PACKAGE	OUTLINE	REEL (PCS)	PER CARTON (PCS)	REEL DIAMETER (mm)	CARTON SIZE (mm)		
					L	W	H
SMB	TAPING	500	4,000	180	360	360	360